baico PUMPS Dynamic water

Product SPECIFICATION SHEET

ACDC DYNAMICS www.acdc.co.za

ETNA2 Series

Application
Recycling and filtering of water in small to medium swimming pools and spa pools

Materials

Pump body and diffuser:	Glass Loaded Polypropylene
Impeller:	Glass loaded Noryl
Mechanical seal:	Ceramic and Graphite
Shaft	Stainless Steel
Motor Housing:	Aluminium
Filter Basket:	Fibreglass

Motor	**Asynchronous 2 Pole induction motor**
Insulation:	**Class F**
Protection:	**IPX5 / Built-in termal protection**
Duty Cycle:	**Continuous**

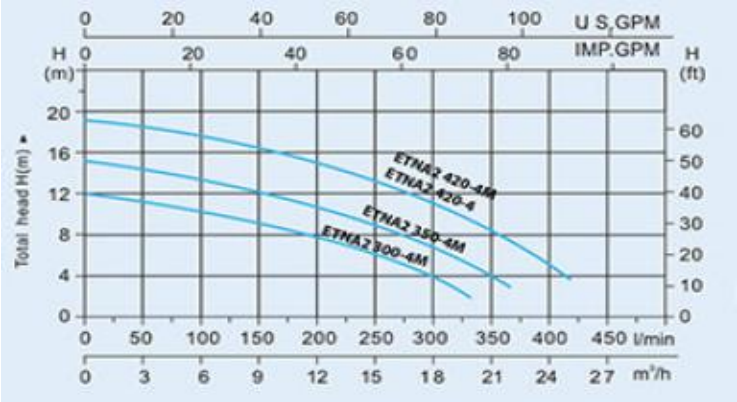

Code	Voltage	Power		Amps	Max Head (m)	Max Flow (l/min)	In / Out (Inch)
		KW	HP				
ETNA2 300-4M	230VAC	0,55	0,75	0,75	12,5	330	2¼ x 2
ETNA2 350-4M	230VAC	0,75	1	1	15	360	2¼ x 2
ETNA2 420-4M	230VAC	1,1	1,5	1,5	17	400	2¼ x 2
ETNA2 420-4	400VAC	1,1	1,5	1,5	17	400	2¼ x 2

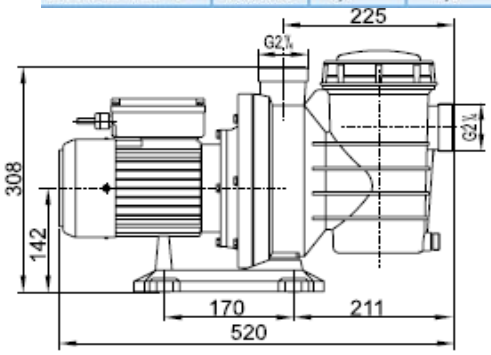

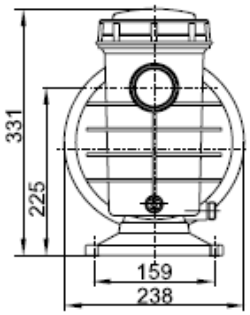

BRANCH CONTACT DETAILS

Johannesburg	010 202 3300
Germiston	011 418 9600
Cape Town	021 510 0710
Pinetown	031 700 4215
Riverhorse	031 492 4800

NATIONAL CALL CENTRE
Sales 010 202 3400
Technical 010 202 3500
www.acdc.co.za

baico PUMPS Dynamic water

Product SPECIFICATION SHEET

ACDC DYNAMICS www.acdc.co.za

ETNA2 Series

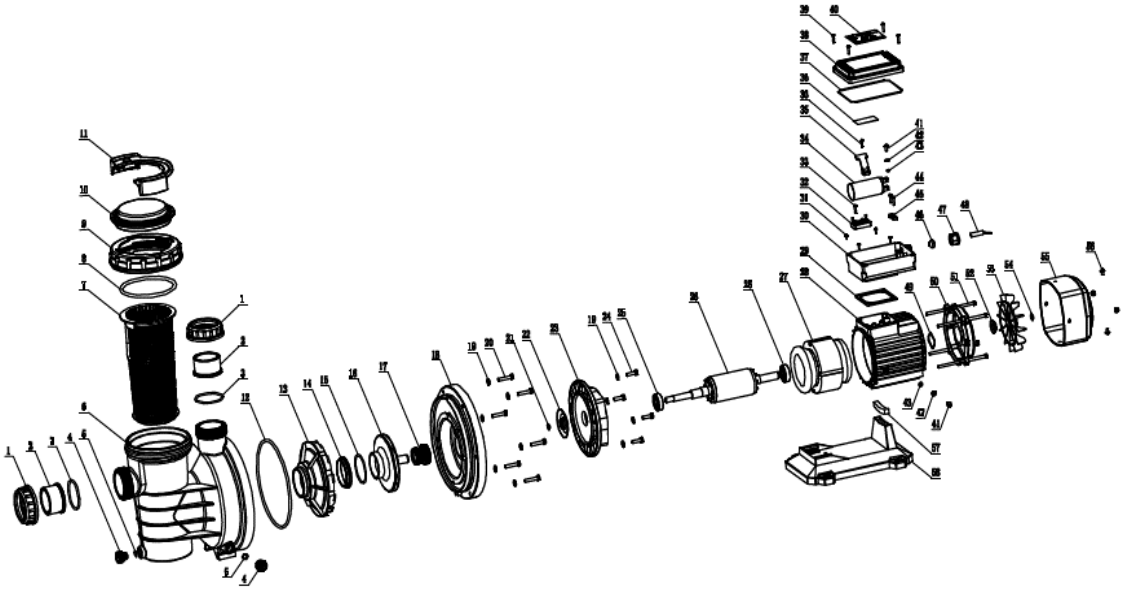

NO.	Componest	Specficiation	QTY
1	Tie-in Nut		2
2	Tie-in		2
3	O-Ring	D61×3.5	2
4	Drainage Plug		2
5	O-Ring	d11.2×2.4	2
6	Pump Casing		1
7	Filter		1
8	O-Ring	d118×5.3	1
9	Transparent cover gland		1
10	Transparent Cover		1
11	Open cover hand		1
12	O-Ring	d188×4.5	1
13	Difusser		1
14	Activities Rings		1
15	O-Ring	d58.8×3.1	1
16	Impeller		1
17	Mechanical Seal	LX-16	1
18	Pump Cover		1
19	Pad	ϕ6	10
20	Hexagon bolt	M6×30	6
21	O-Ring	d11.2×2.4	1
22	Retaining block		1
23	Flange		1
24	Hexagon bolt	M6×20	4
25	Bearing	6202	2
26	Rotor With Shaft		1
27	Stator		1
28	Motor Base		1
29	Terminal Box Pad		1

NO.	Componest	Specficiation	QTY
30	Terminal Box		1
31	Screw With Pad	M4×8	4
32	Connection Pole		1
33	Tapping Screws	ST3.5×13	2
34	Capacitor		1
35	Capacitor Gland		1
36	Wiring diagram		1
37	O-Ring	D120×2	1
38	Terminal Box Cover		1
39	Tapping Screws	ST3.5×16	4
40	Name plate		1
41	Screw	M5×10	2
42	Spring Pad	ϕ5	2
43	Pad	ϕ5	2
44	Tapping Screws	ST3.5×16	2
45	Cable Gland		1
46	Terminal Box Ring		1
47	Terminal Box Nut		1
48	Cable		1
49	Wave Spring Washer	D35	1
50	Back Cover		1
51	Hexangular head bolt	M5×142	4
52	Shaft Washer	d15	1
53	Fan		1
54	Shaft with wire snap rings	d12.5	1
55	Fan Cover		1
56	Screw With Pad	M4×8	4
57	Rubber Strap		1
58	Bracket		1

BRANCH CONTACT DETAILS

Johannesburg	010 202 3300
Germiston	011 418 9600
Cape Town	021 510 0710
Pinetown	031 700 4215
Riverhorse	031 492 4800

NATIONAL CALL CENTRE

Sales	010 202 3400
Technical	010 202 3500

www.acdc.co.za