MA MOTOR PROTECTION & CONTROL RELAY



Installation and setting up procedures for Modbus Module

Ver.2.0

26 June 2008

NEW ELEC

Picture Layout of MA-Relay with Modbus Module.

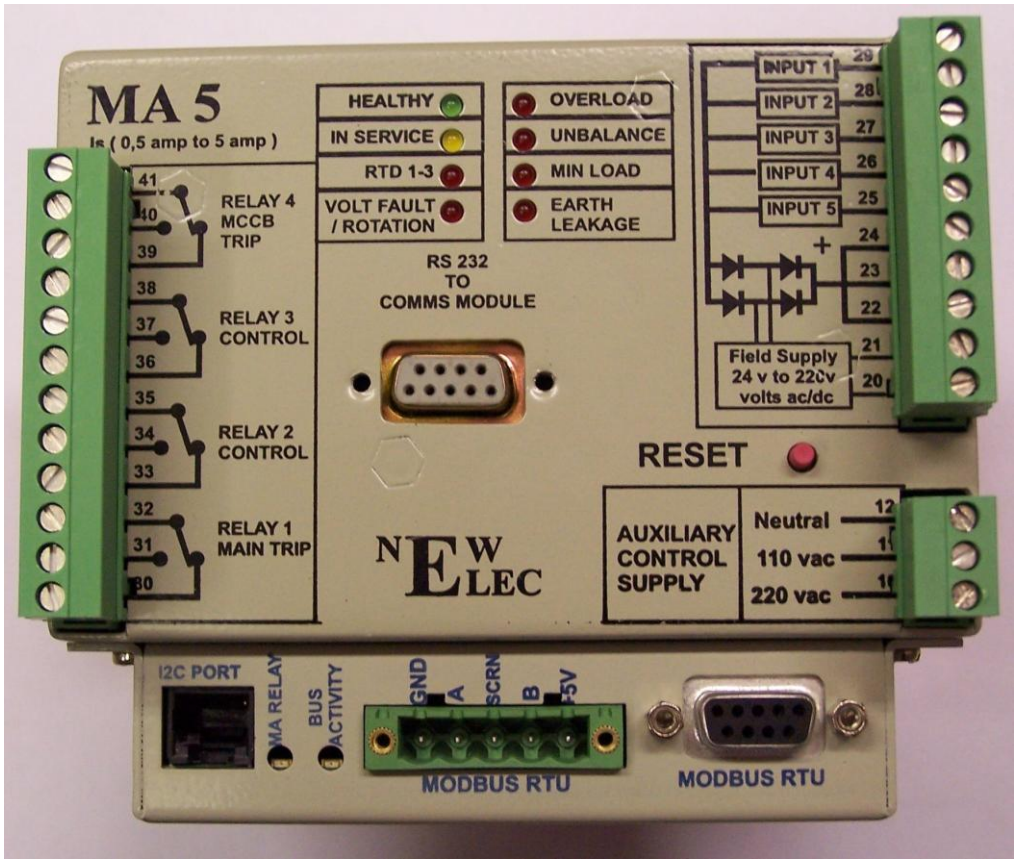





Description of Modbus Module Connections.

I2C Port

- Used as an engineering port to change the modules Modbus Address and baud rate.
  Pin assignment:
  1. VDD
  2. SCL
  3. SDA
  4. Rx
  5. Tx
  6. GND
- This port can also be used with expansion modules, e.g. FLED unit.

5-Pin Modbus RTU connection.

- GND – Ground connection (Optional).
- A – Modbus High connection.
- SCRN – Cable Screen connection. (Optional).
- B – Modbus Low Connection.
- +5V – Output voltage of +5 Volt. (No connection required for Modbus).

DB9 Modbus RTU connection.

1. SCRN
2. N.C.
3. Modbus Connection A.
4. N.C.
5. GND
6. +5V
7. N.C.
8. Modbus Connection B.
9. N.C.

What is RS485?

RS485 or EIA (Electronic Industries Association) RS485 is a balanced line, half-duplex transmission system allowing transmission distances of up to 1.2 km. The following table summarises the RS-485 Standard:

PARAMETER	
Mode of Operation	Differential
Number of Drivers and Receivers	32 Drivers, 32 Receivers
Maximum cable length (metres)	1200
Maximum data rate (baud)	10 M
Maximum common mode voltage (Volts)	12 to -7
Minimum Driver Output Levels (Loaded)	+/- 1.5
Minimum Driver Output Levels (Unloaded)	+/- 6
Drive Load (Ohms)	60 (min)
Driver Output short circuit current Limit (mA)	150 to Gnd, 250 to -7 or 12 V
Minimum receiver input Resistance (kohms)	12
Receiver sensitivity	+/- 200mv

What is half duplex?

Half duplex is a system in which one or more transmitters (talkers) can communicate with one or more receivers (listeners) with only one transmitter being active at any one time. For example, a "conversation" is started by asking a question, the person who has asked the question will then listen until he gets an answer or until he decides that the individual who was asked the question is not going to reply.

In a 485 network the "master" will start the "conversation" with a "Query" addressed to a specific "slave", the "master" will then listen for the "slave's" response. If the "slave" does not respond within a pre-defined period, (set by control software in the "master"), the "master" will abandon the "conversation".

Connecting the Instruments

Screened twisted pair cable should be used. All "A" connections should be connected together using one conductor of the twisted pair cable, all "B" connections should be connected together using the other conductor in the pair. The cable screen should be connected to the "Gnd" terminal.

A Belden 9841 (Single pair) or 9842 (Two pair) cable with a characteristic impedance of 120 ohms is recommended, the cable should be terminated at each end with a 120 ohm, quarter watt (or greater) resistor.

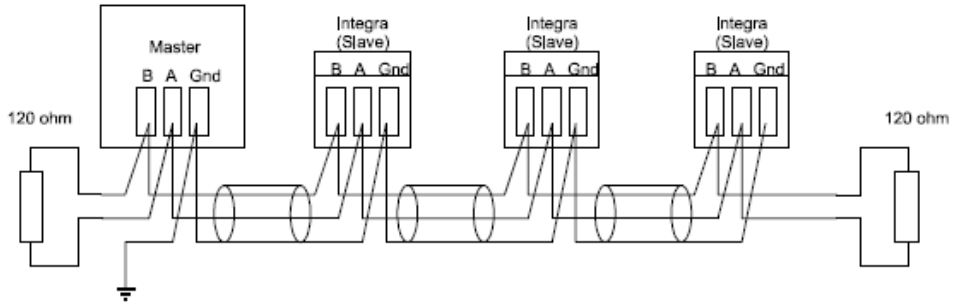

There must be no more than two wires connected to each terminal, this ensures that a “Daisy Chain or “straight line” configuration is used. A “Star” or a network with “Stubs (Tees)” is not recommended as reflections within the cable may result in data corruption.

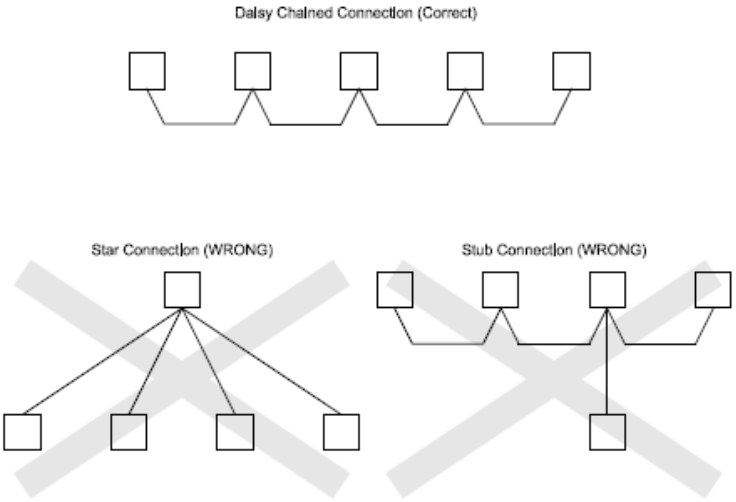

Which is A and Which is B?

The A and B connections to the SPR and Integra Products can be identified by the signals present on them whilst there is activity on the RS485 bus:

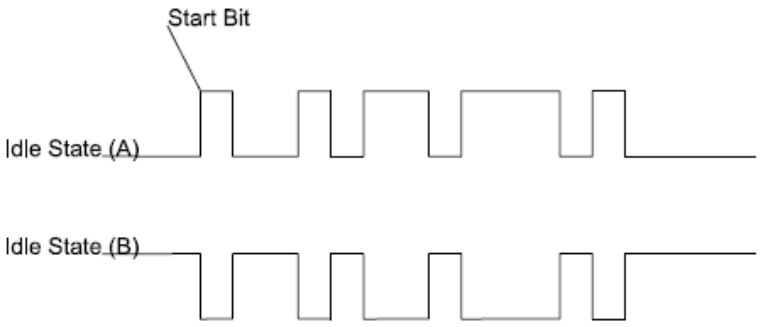

MODBUS Messages

Communication on a MODBUS Network is initiated (started) by a “Master” with a “query” to a “Slave”. The “Slave “ which is constantly monitoring the network for “Queries” will recognise only the “Queries” addressed to it and will respond either by performing an action (setting a value for example) or by returning a “response”. Only the Master can initiate a query.

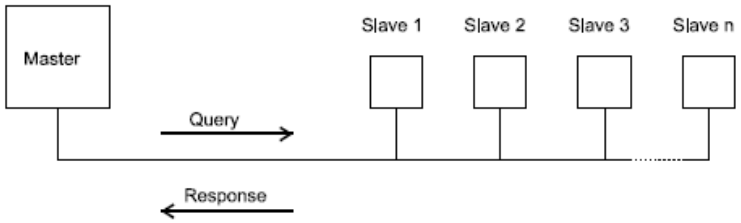

In the MODBUS protocol the master can address individual slaves, or, using a special “Broadcast” address, can initiate a broadcast message to all slaves. The SPR and Integra products do not support the broadcast address.

MODBUS Message Format

The MODBUS protocol defines the format for the master's query and the slave's response.

The query contains the device (or broadcast) address, a function code defining the requested action, any data to be sent, and an error-checking field.

The response contains fields confirming the action taken, any data to be returned, and an error-checking field. If an error occurred in receipt of the message, or if the slave is unable to perform the requested action, the slave will construct an error message and send it as its response.

Query

The example illustrates a request for a single 16-bit Modbus Register.

Slave Address	Function Code	Start Address (Hi)	Start Address (Lo)	Number of Points (Hi)	Number of Points (Lo)	Error Check (Lo)	Error Check (Hi)

Slave Address: 8-bit value representing the slave being addressed (1 to 247), 0 is reserved for the broadcast address. The SPR and Integra products do not support the broadcast address.

Function Code: 8-bit value telling the addressed slave what action is to be performed. (3, 4, or 16 are valid for Integra)

Start Address (Hi): The top (most significant) eight bits of a 16-bit number specifying the start address of the data being requested.

Start Address (Lo): The bottom (least significant) eight bits of a 16-bit number specifying the start address of the data being requested.

Number of Points (Hi): The top (most significant) eight bits of a 16-bit number specifying the number of registers being requested.

Number of Points (Lo): The bottom (least significant) eight bits of a 16-bit number specifying the number of registers being requested.

Error Check (Lo): The bottom (least significant) eight bits of a 16-bit number representing the error check value.

Error Check (Hi): The top (most significant) eight bits of a 16-bit number representing the error check value.

Response

The example illustrates the normal response to a request for a single 16-bit Register.

Slave Address	Function Code	Byte Count	Data (Hi)	Data (Lo)	Error Check (Lo)	Error Check (Hi)

Slave Address: 8-bit value representing the address of slave, which has just responded.

Function Code: 8-bit value which, when a copy of the function code in the query, indicates that the slave recognised the query and has responded. (See also Exception Response).

Byte Count: 8-bit value indicating the number of data bytes contained within this response

Data (Hi): The top (most significant) eight bits of a 16-bit number representing the register(s) requested in the query.

Data (Lo): The bottom (least significant) eight bits of a 16-bit number representing the register(s) requested in the query.

Error Check (Lo): The bottom (least significant) eight bits of a 16-bit number representing the error check value.

Error Check (Hi): The top (most significant) eight bits of a 16-bit number representing the error check value.

Exception Response

If an error is detected in the content of the query (excluding parity errors and Error Check mismatch), the function code will be modified to indicate that the response is an error response (called an exception response), and the data bytes will contain a code that describes the error. The exception response is identified by the function code being a copy of the query function code but with the most-significant bit set to logic '1'.

Slave Address	Function Code'	Error Code	Error Check (Lo)	Error Check (Hi)

Slave Address: 8-bit value representing the address of slave, which has just responded.

Function Code: 8 bit value which is the function code in the query OR'ed with Hex (80), indicating the slave either does not recognise the query or could not carry out the action requested.

Error Code: 8-bit value indicating the nature of the exception detected. (See "Exception Codes" in the section "Product Information for a list of SPR and Integra supported codes).

Error Check (Lo): The bottom (least significant) eight bits of a 16-bit number representing the error check value.

Error Check (Hi): The top (most significant) eight bits of a 16-bit number representing the error check value.

Using the ModbusModSetup Tool to change Modbus address and BAUD rate

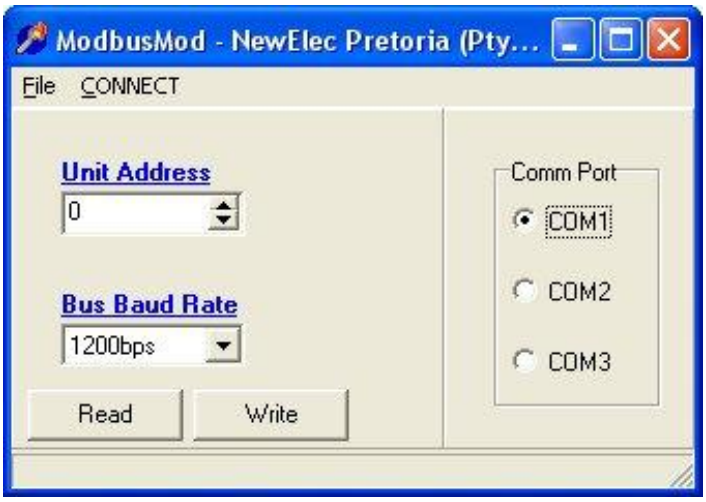

Open the ModbusModSetup.exe application in the **"…\Information\Downloads\MA Relay Downloads\Doc\Modbus Docs\ModBusMod Interface"** directory on the NewElec Application install CD.

When the application is opened, select the correct communication port you have connected to the Modbus slave,



with a CAB0004 cable and a CAB0013 adaptor cable connected and plugged into the I2C Port.

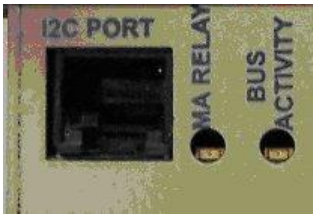

Then Click on “Connect” on the menu bar.



Enter the required slave address,



Select the required baud rate,

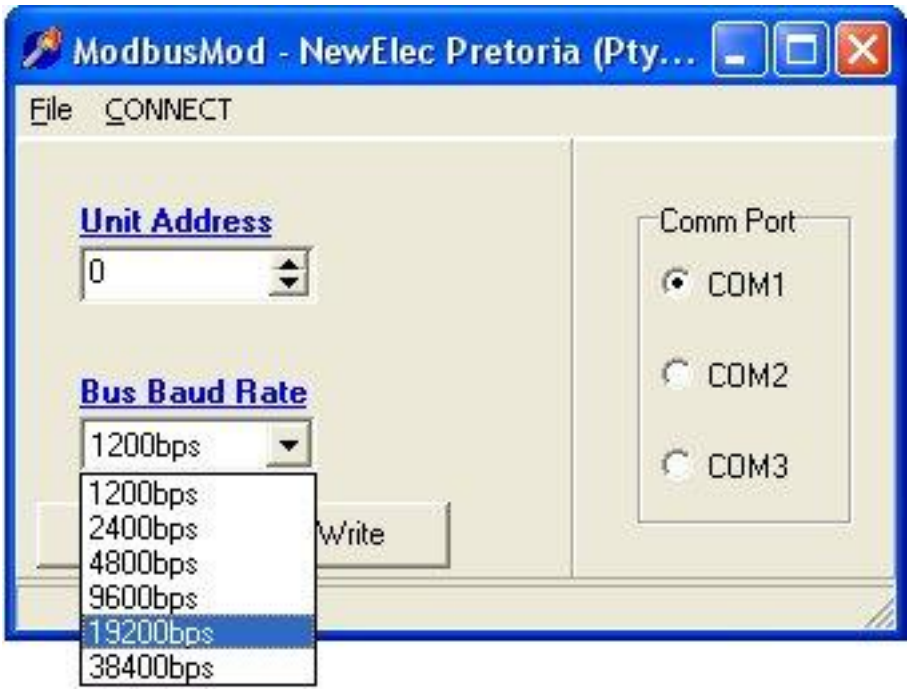

And click on the **Write** button to update the slave.

To read-up the configuration from the slave, just click on the **Read** button.