

Sirenco Battery Beacon

BEACONS & LIGHTS

This robust, magnetic base LED beacon is battery operated and includes a wall Charger or a 12Vdc car charger. The connection eliminates the problem of having the cable from the cigarette lighter through the window to the roof. The modern SMD high bright LED design also allows for excellent visibility in the day and night.

SPECIFICATIONS

VOLTAGE	Battery Operated
COLOURS	Red; Amber; Blue; Green (Other colours available on request
LIGHT SOURCE	9W LED - 40 SMD 360˚
FUNCTIONS	Rotating at 2Hz (120/Per min) | Flashing at 2Hz (120/Per min) | Static for static application
PEAK INTENSITY	70 Lux Rotating | 100 Lux Flashing | 70 Lux Static
CHARGING TIME	± 3.5 Hours
OPERATING TIME	12 hours
IP RATING	IP 65
WEIGHT	1.1Kg
PACKING DIMENSIONS	200mm x 140mm x 140mm

NOTES | Includea a wall and a car charging unit.

PRODUCT CODES

Code	SPF(x*)074			
Detail	Batery Operated			

*** x = A for Amber / B for Blue / G for Green / R for Red**

TECHNICAL DRAWINGS

All dimensions in mm

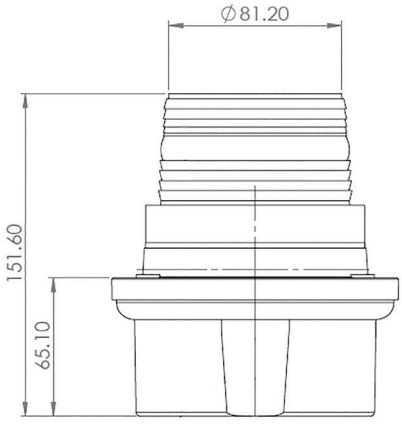

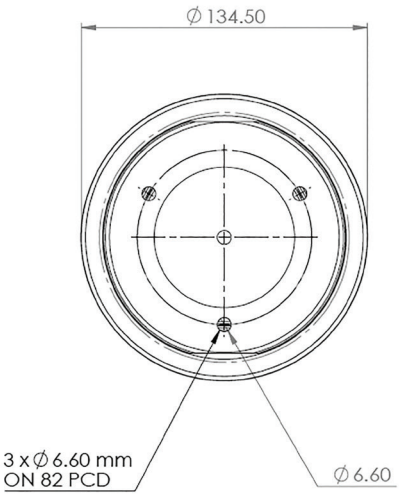

EXTRAS

Charger unit



