Product SPECIFICATION SHEET

ACDC DYNAMICS
www.acdc.co.za

1000VDC 30A DIN FUSE HOLDER

SRD-30



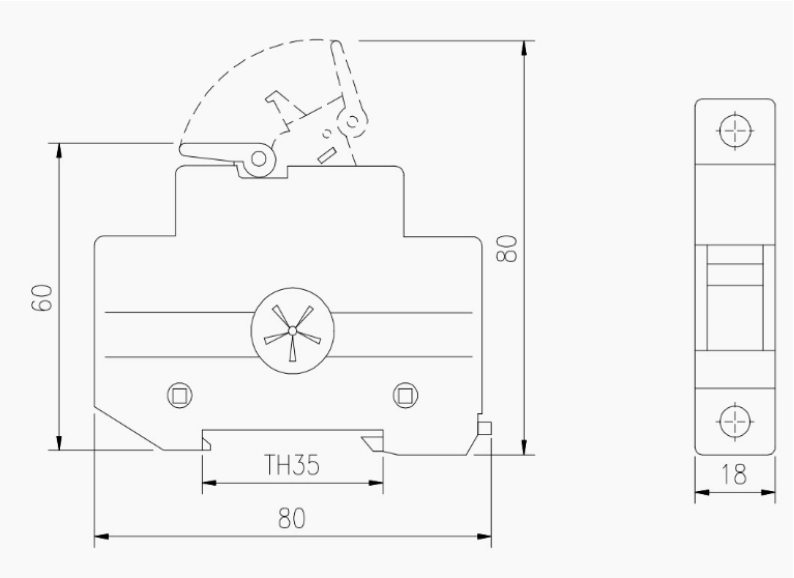

Supplier Model Reference	CFPV-32
Recommended Fuse Links	CFPV1038/10x38 fuse links
Voltage	10000 Vdc
Current	32A
Wire Range	1-6mm²
Torque	2.5Nm
Operating Class	gPV and UL PV Fuse holders
Approvals or Standards	UL Listed to 248-19, Guide JFGA
	IEC 60269-6 (gPV)
	RoHS Compliant
Country of Origin	China

BRANCH CONTACT DETAILS

Johannesburg	010 202 3300
Germiston	011 418 9600
Cape Town	021 510 0710
Pinetown	031 700 4215
Riverhorse	031 492 4800

NATIONAL CALL CENTRE
Sales 010 202 3400
Technical 010 202 3500
www.acdc.co.za