SOAK, SVNK, SVSK - INNER PARTITION SERIES OK

Horizontal partitions: they separate 2 sections of the enclosure and can be used as inner horizontal support, they are srewed to the frame elements.

CODE	DIMENSIONS			
	Nominal		Other	
	W	D	A	B
SOAK605	600	500	499	401
SOAK606	600	600	499	501
SOAK608	600	800	499	701
SOAK804	800	400	699	301
SOAK805	800	500	699	401
SOAK806	800	600	699	501
SOAK808	800	800	699	701
SOAK105	1000	500	899	401
SOAK106	1000	600	899	501
SOAK108	1000	800	899	701
SOAK125	1200	500	1099	401
SOAK126	1200	600	1099	501
SOAK128	1200	800	1099	701
SOAK145	1400	500	1299	401
SOAK146	1400	600	1299	501
SOAK148	1400	800	1299	701
SOAK165	1600	500	1499	401
SOAK166	1600	600	1499	501
SOAK168	1600	800	1499	701

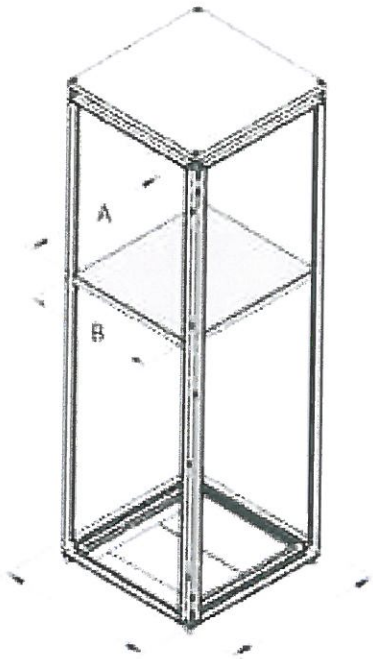

Vertical partitions: they separate 2 sections of the same enclosure (SVNK), or can be installed in between 2 enclosures coupled together (SVSK), with an additional gasket.

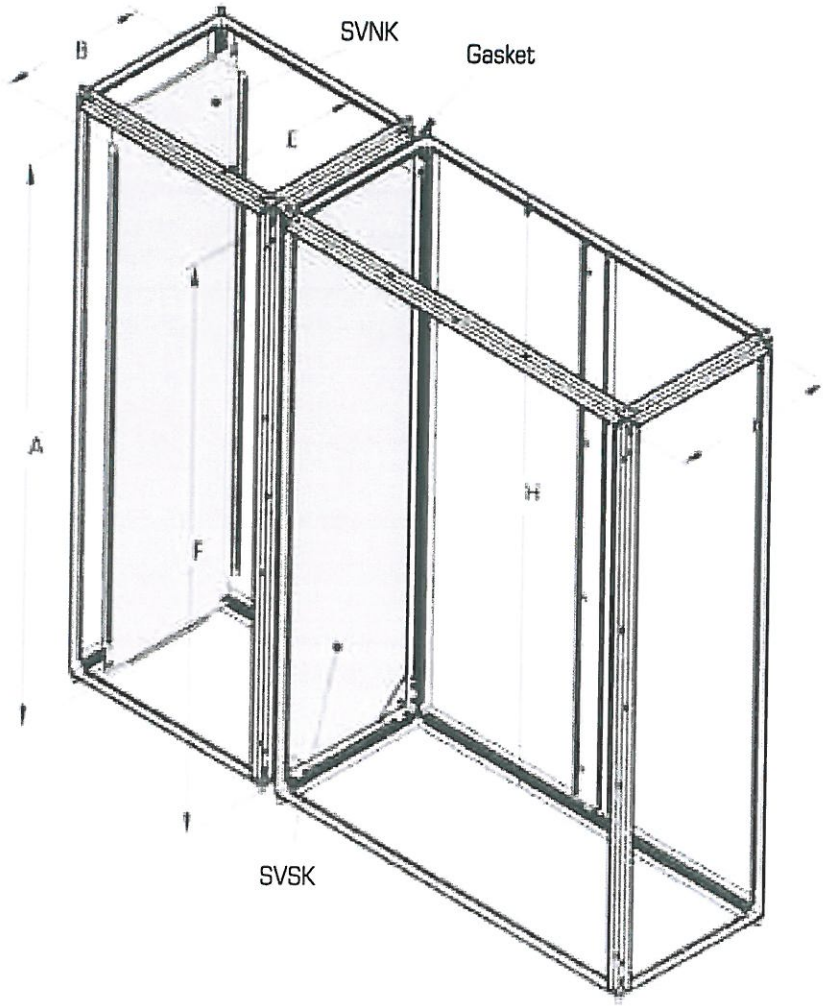

CODE	DIMENSIONS			
	Nominal		Other	
	H	D	A	B
SVNK164	1600	400	1493	300
SVNK165	1600	500	1493	400
SVNK166	1600	600	1493	500
SVNK184	1800	400	1693	300
SVNK185	1800	500	1693	400
SVNK186	1800	600	1693	500
SVNK188	1800	800	1693	700
SVNK204	2000	400	1893	300
SVNK205	2000	500	1893	400
SVNK206	2000	600	1893	500
SVNK208	2000	800	1893	700
SVNK226	2200	600	2093	500
SVNK228	2200	800	2093	700

CODE	DIMENSIONS			
	Nominal		Other	
	H	D	F	E
SVSK164	1600	400	1509	319
SVSK165	1600	500	1509	419
SVSK166	1600	600	1509	519
SVSK184	1800	400	1709	319
SVSK185	1800	500	1709	419
SVSK186	1800	600	1709	519
SVSK188	1800	800	1709	719
SVSK204	2000	400	1909	319
SVSK205	2000	500	1909	419
SVSK206	2000	600	1909	519
SVSK208	2000	800	1909	719
SVSK226	2200	600	2109	519
SVSK228	2200	800	2109	719