Haitai Solar

Half-Cell SERIES

HTM360~380PH-78

Half-Cell Polycrystalline Silicon PV Modules



HIGH OUTPUT POWER

Output power is higher than the same type of conventional polycrystalline modules

ANTI-PID CHARACTERISTICS

Ensure large-scale production of half-cell polycrystalline modules pass PID test

HOT-SPOT EFFECT

Excellent hot-spot immunity, can effectively avoid the power loss caused by shadow coverage, significantly extend life span

LOAD CAPACITY

Certified to withstand:wind load(2400 Pascal)and snow load(5400 Pascal)

HARSH ENVIRONMENT ADAPTATION

High salt mist and ammonia resistance certified by TUV

LINEAR PERFORMANCE WARRANTY

12-year product warranty / 25-year linear power warranty

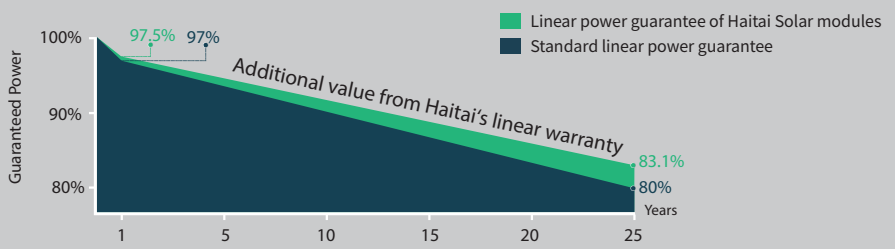

Mechanical Data

Cell Type	156.75×78.375mmPoly
Cell Orientation	156(6×26)
Module Dimensions	2136×992×35mm
Weight	23.5kg
Glass	3.2mm high transmittance, reinforced glass
Backsheet	Anti-aging film
Frame Material	Anodized aluminum alloy
Junction Box	Protection class IP68
Cable	4.0 mm² positive pole: 250 mm negative pole: 300 mm wire length can be customized
Connector	MC4 compatible connector

HTM360~380PH-78

Half-Cell Polycrystalline Silicon PV Modules

Electrical Data (STC)

Maximum Power (Pmax/W)	360	365	370	375	380
Open Circuit Voltage (Voc/V)	50.48	50.68	50.88	51.08	51.28
Short Circuit Current (Isc/A)	9.14	9.23	9.32	9.41	9.50
Voltage at Maximum Power (Vmp/V)	41.21	41.41	41.61	41.81	42.01
Current at Maximum Power (Imp/A)	8.74	8.82	8.90	8.97	9.05
Module Efficiency (%)	16.99	17.23	17.46	17.70	17.93

Electrical Data (NMOT)

Maximum Power (Pmax/W)	266	270	274	278	282
Open Circuit Voltage (Voc/V)	46.26	46.46	46.66	46.86	47.06
Short Circuit Current (Isc/A)	7.52	7.60	7.67	7.74	7.80
Voltage at Maximum Power (Vmp/V)	38.23	38.43	38.63	38.83	39.03
Current at Maximum Power (Imp/A)	6.96	7.03	7.10	7.16	7.23

STC (Standard Testing Conditions): Irradiance 1000W/m², Cell Temperature 25℃, AM1.5

NMOT (Nominal Moudule Operating Temperature): Irradiance 800W/m², Ambient Temperature 20℃, AM1.5, Wind Speed 1m/s.

I-V Curve

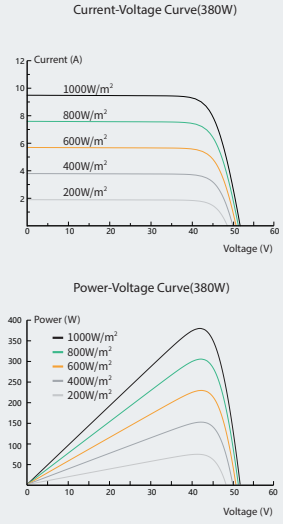

Temperature Coefficients

Temperature Coefficient (Pm)	-0.370%℃
Temperature Coefficient (Voc)	-0.290%℃
Temperature Coefficient (Isc)	0.050%℃

Operating Parameters

Maximum System Voltage	1000/1500V
Operating Temperature	-40℃ ~+85℃
NMOT (Nominal Moudule Operating Temperature)	41±3℃

Packaging

Modules Per Pallet: 31+31pcs/31+31+4 pcs

Modules Per 40'HQ Container:620pcs/660 pcs

Module Dimensions (mm)

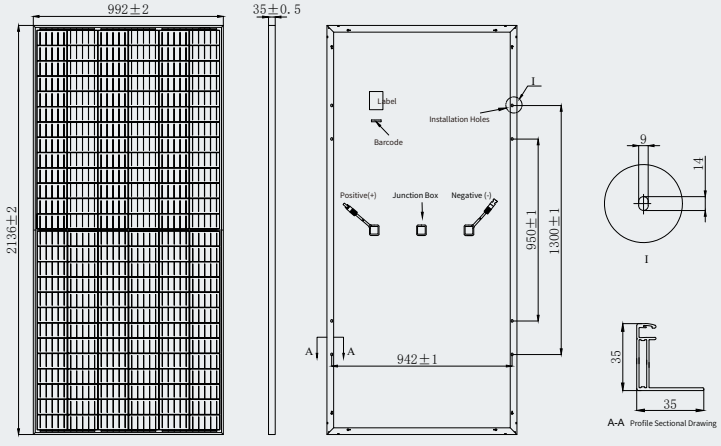

*Due to continuous innovation, R & D and product improvement, Haitai Solar has the right to adjust the specs on this datasheet at any time without prior notice.

Haitai Solar

Tangshan Haitai New Energy Technology Co., Ltd.

Add: No.88, Haomen Road, Yutian County, Tangshan City, Hebei Province, China

Tel: +86-315-5051826 E-mail: ht@htsolargroup.com

Web: www.haitai-solar.com