Product SPECIFICATION SHEET

ACDC DYNAMICS
www.acdc.co.za

TELKOM 6 SURFACE MOUNT D/B 800x800x150 IP40

TEL-S6

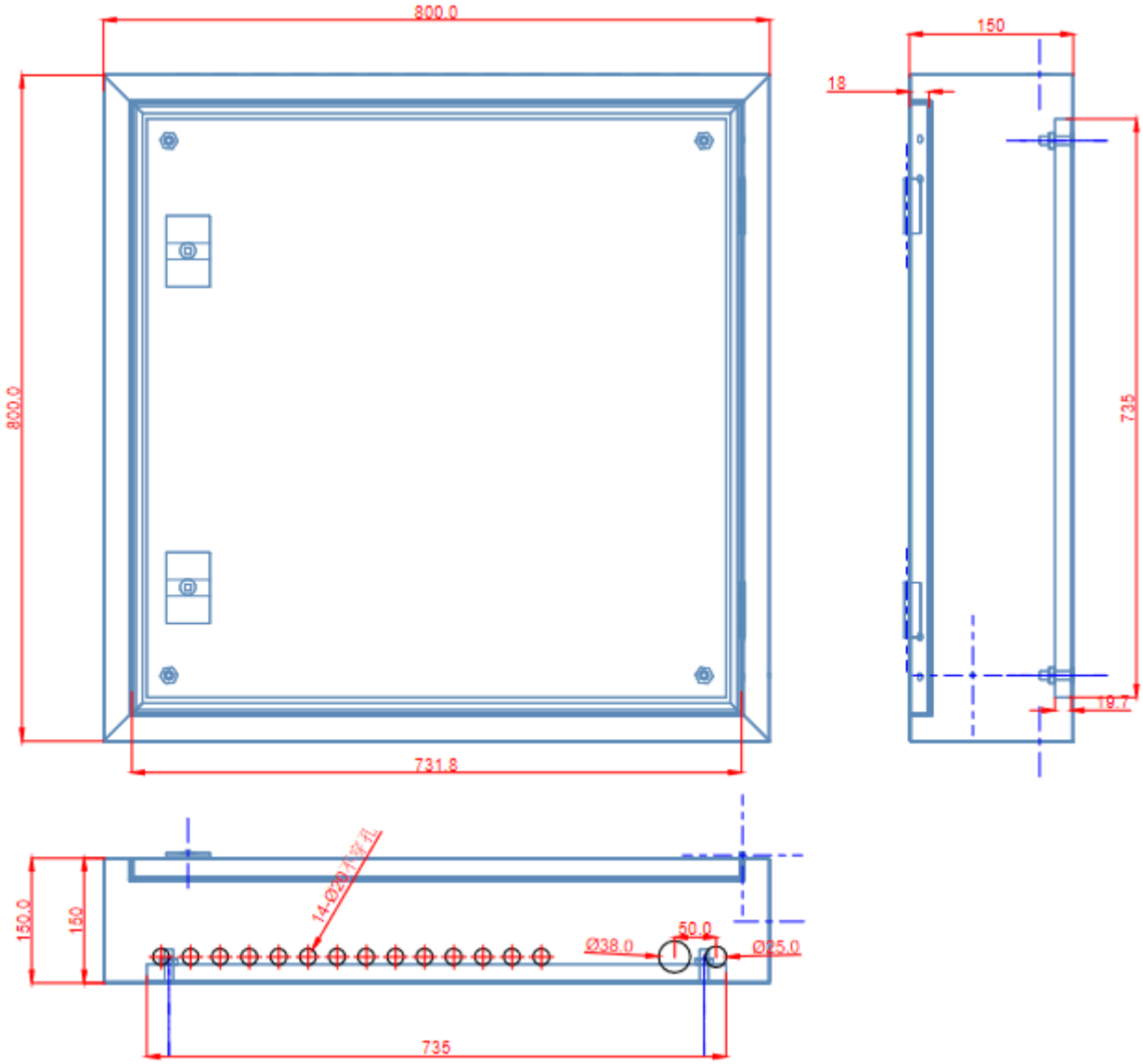

BRANCH CONTACT DETAILS

Johannesburg	010 202 3300
Germiston	011 418 9600
Cape Town	021 510 0710
Pinetown	031 700 4215
Riverhorse	031 492 4800

NATIONAL CALL CENTRE

Sales 010 202 3400
Technical 010 202 3500

www.acdc.co.za