Product SPECIFICATION SHEET

ACDC DYNAMICS
www.acdc.co.za

TRT-TRANSMITTERS




智能温度变送器模块
电源：9-36VDX
输出：4-20MA
量程：0-800℃
精度：0.2%F.S
Smart Temperature Transmitter Module
9-36VDX
4-20MA
量程：0-800℃
精度：0.2%F.S

A variety of input sensors / adjustable range /
four-point linear / anti-vibration and anti-interference

There is power to choose







Fast Response



USB Interface

Intelligent software configuration function

With USB connection,

There is power to choose

users can adjust the input signal of the transmitter through the configuration software at any time according to their needs. A transmitter module can almost adapt to the common temperature input on the market.



Product Parameters



Brand Name: CG

Product name: Smart Temperature Transmitter Module

Working power supply: 12-35VDC

Measurement accuracy: RTD0.1%: TC0.2%

Load: 250Ωor500Ω

Working temperature: -30~80℃

Output: 4-20mA

Sensor: various types of thermal resistance, thermocouple

Dimensions

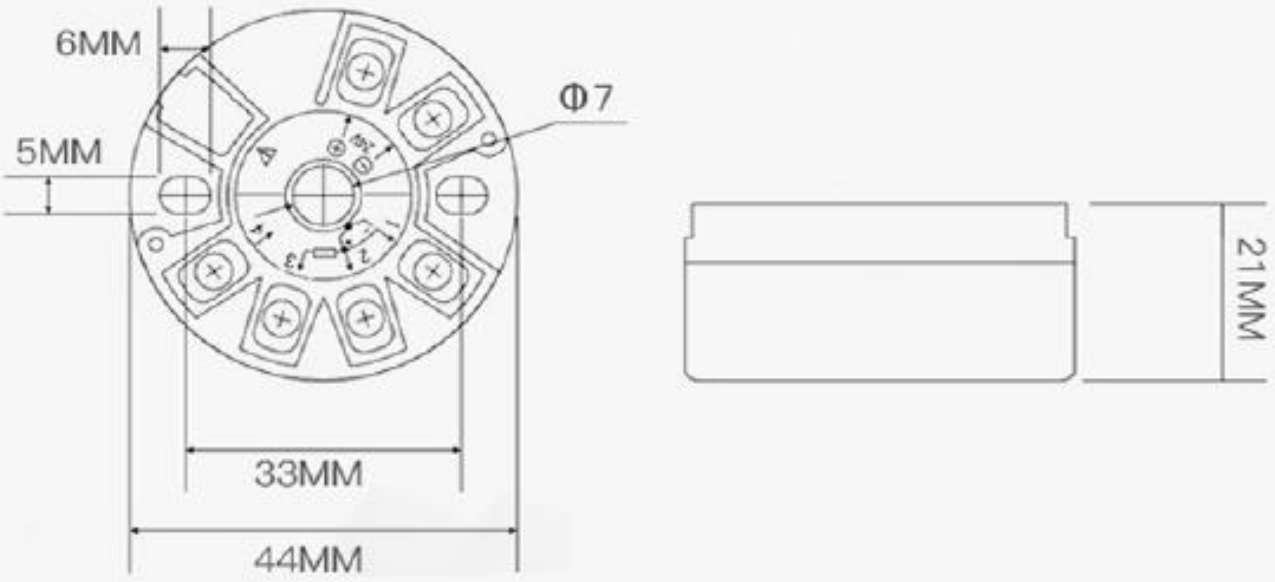

Wiring Instructions

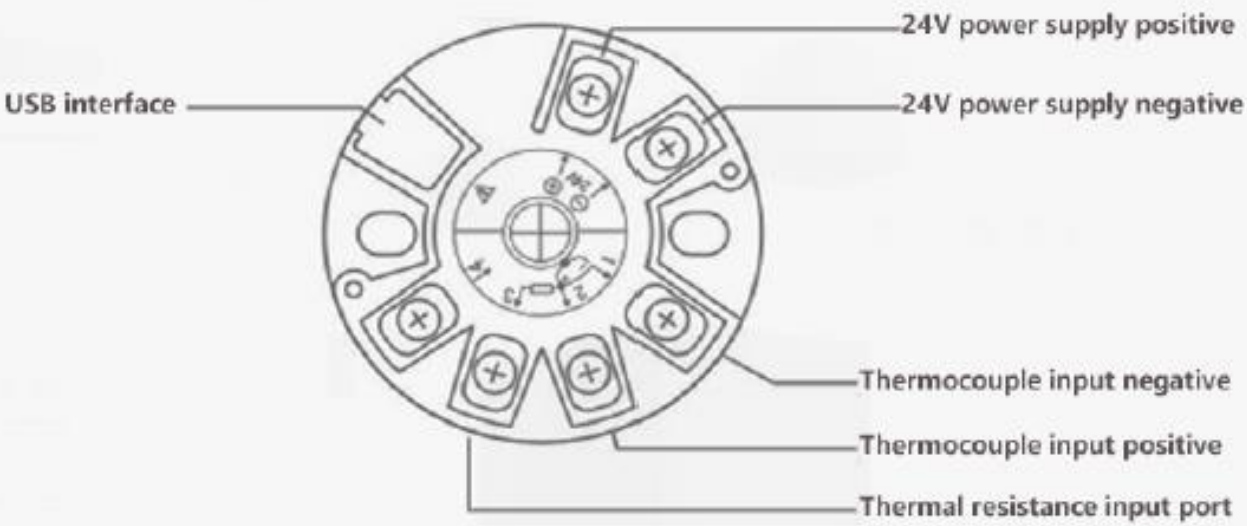

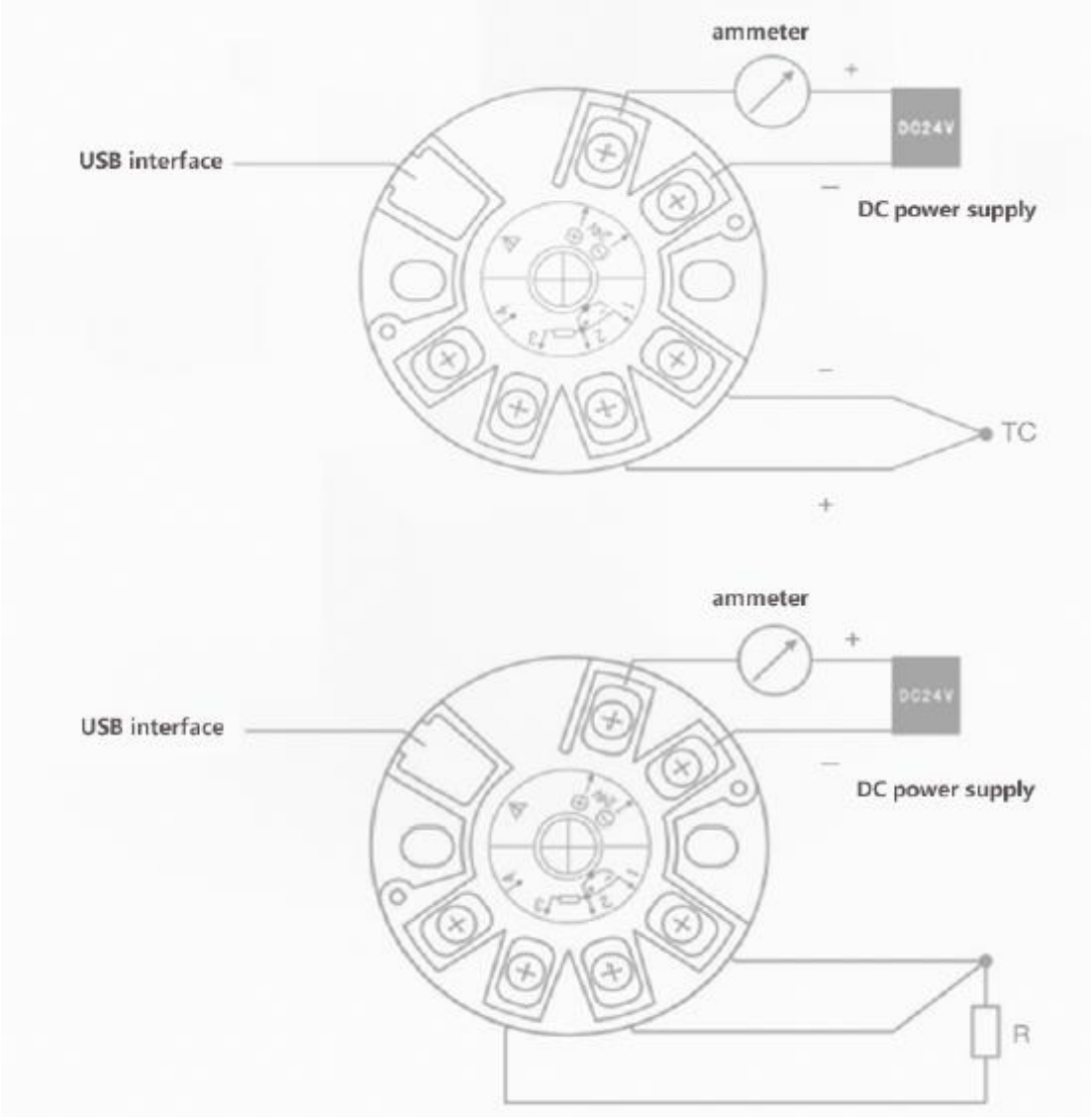



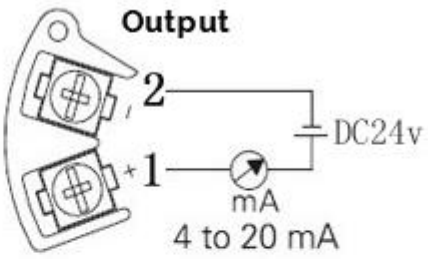

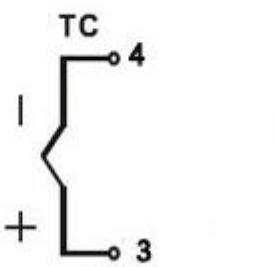

Thermocouple signal input

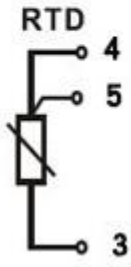

RTD Signal input