SPECIFICATION



LED Downlight

DL229 Series

ACDC DYNAMICS
www.acdc.co.za



Introduction

DL229 COB downlight is unique designed with reflector and COB high power LED chip. ADC12 Aluminum profile provides excellent thermal dissipation. Short heatsink designed for any ceiling installations. Isolated driver solution both in dimmable and non-dimmable version achieves great dimming compatibility with worldwide brand dimmers

Features

1.) Up to 70% energy saving compared to standard CFL
2.) L70 - 50,000 hours
3.) Triac dim
4.) 90-210mm cutout
5.) No UV/IR light
6.) Environment friendly, without Mercury or any other hazardous substances
7.) High Lumen 110lm/W

Application Areas

It is designed for general lighting applications in office, supermarket, shop, school, hotel, etc. It is also widely used for public areas, such as stairway, lobby, reception, corridors etc.






26 Nguni Drive, Longmeadow Business Estate, Edenvale, Gauteng, South Africa
Sales: 010 202 3400 | Technical: 010 202 3500 | Johannesburg: 010 202 3300
Germiston: 011 418 9600 | Cape Town: 021 510 0710 | Pinetown: 031 700 4215 | Riverhorse: 031 492 4800

ACDC DYNAMICS
www.acdc.co.za



Technical Data Sheet (1)

Model No.	UP-DL229-10W-*	UP-DL229-18W-*
Dimension(mm)	Ø110*53mm	Ø145*65mm
Cutout (mm)	Ø90-95mm	Ø120-130mm
Watt(W)	10W	18W
Rated Input Voltage(V)	AC230V	
Input Voltage(V)	AC200-240V	
LED Module Input	DC33-38V	
Light Source	COB	
SDCM	<6	
CCT(K)	1-CCT: 3000K/4000K/5000K	
lm/W	95lm/W	95lm/W
CCT Selection DIP Switch	–	
Luminous Flux (lm) ±5%	950lm	1720lm
CRI	≥80	
Beam Angle (°)	60°	60°
UGR	-	
LED Driver	Built-out	
Dimming Option	Triac	
Sensor	-	
Emergency Kits	-	
Electrical Class	Class Ⅱ	
Ingress Protection (IP Rating)	IP54	
Impact Resistance (IK Rating)	-	
Product Finishing(Base)	White RAL 9016 (Trim) / Black RAL9005 (Heatsink)	
Materials of Optics	PC	
Materials of Housing	PC/Aluminium	
Warranty	5 Year	
Glow wire test (˚C)	850˚C	
Operating Temp. (˚C)	-20˚C ~45˚C	
Storage Temp. (˚C)	-20˚C ~65˚C	
Installation	Recessed	

26 Nguni Drive, Longmeadow Business Estate, Edenvale, Gauteng, South Africa
Sales: 010 202 3400 | Technical: 010 202 3500 | Johannesburg: 010 202 3300
Germiston: 011 418 9600 | Cape Town: 021 510 0710 | Pinetown: 031 700 4215 | Riverhorse: 031 492 4800

ACDC DYNAMICS
www.acdc.co.za

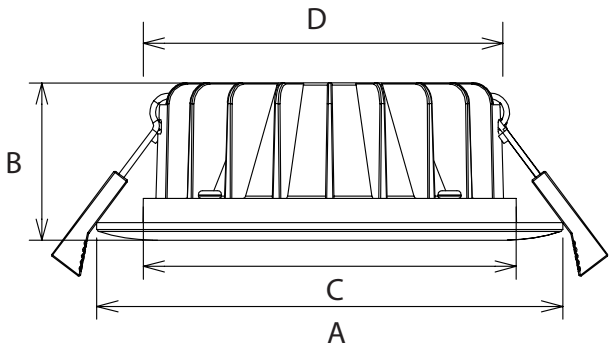

CRI ≥80 | PF 0.9 | HOURS 50000

Measurement

Model	Dimension(mm)				Size(mm)	Product Weight (Kg)		Package weight (Kg)		Carton Size(cm)	Qty/CTN	20GP (pcs)	40HQ (pcs)
	A	B	C	D		N.W/PC	G.W/PC	N.W/CTN	G.W/CTN				
3"	110	53	79.7	88.5	110*53	0.25	0.305	9.15	10.35	39*28*57	30PCS	14400	29040
4"	145	65	109.7	118.5	145*65	0.405	0.49	9.8	11.1	35*33*59	20PCS	6780	18480
6"	190	75	149.7	158.5	190*75	0.69	0.8	9.6	10.8	66*46*20.5	12PCS	5676	12672
8"	225	87	180.7	193.5	225*87	0.96	1.125	13.5	15.1	54.5*51*35	12PCS	3168	7392

Technical Data Sheet (2)

Model No.	UP-DL229-18W-*	UP-DL229-25W-*	UP-DL229-42W-*
Dimension(mm)	Ø225*87mm		
Cutout (mm)	Ø200-210mm		
Watt(W)	18W	25W	42W
Rated Input Voltage(V)	AC230V		
Input Voltage(V)	AC200-240V		
LED Module Input	DC33-38V		
Light Source	COB		
SDCM	<6		
CCT(K)	3000K/4000K/5000K		
lm/W	100lm/W	104lm/W	1101lm/W
Luminous Flux (lm) ±5%	1800lm	2600lm	4600lm
CRI	≥80		
Beam Angle (°)	60°	60°	
UGR	-		
LED Driver	Built-out		
Dimming Option	Triac		
Sensor	-		
Emergency Kits	-		
Electrical Class	Class II		
Ingress Protection (IP Rating)	IP54		
Impact Resistance (IK Rating)	IK06		
Product Finishing(Base)	White RAL 9016 (Trim) / Black RAL9005 (Heatsink)		
Materials of Optics	PC		
Materials of Housing	PC/Aluminium		
Warranty	5 Year		
Glow wire test (˚C)	850˚C		
Operating Temp. (˚C)	-20˚C ~45˚C		
Storage Temp. (˚C)	-20˚C ~65˚C		
Installation	Recessed		

26 Nguni Drive, Longmeadow Business Estate, Edenvale, Gauteng, South Africa
Sales: 010 202 3400 | Technical: 010 202 3500 | Johannesburg: 010 202 3300
Germiston: 011 418 9600 | Cape Town: 021 510 0710 | Pinetown: 031 700 4215 | Riverhorse: 031 492 4800

ACDC DYNAMICS
www.acdc.co.za

Driver Datasheet (Triac Dimmable)

Total load wattage		10W	18W	25W	42W
Output	Output Voltage range	DC23-40V			
	Rated output current	230mA	430mA	600mA	1000mA
	Line Regulation	±5%			
	Setup, Rise Time	<1S			
	Flickering Index	-	-	<10%	<10%
Input	Input Voltage	AC200-240V			
	Rated Input Voltage(V)	AC230V			
	Frequency	50Hz			
	Input Current	≤0.06A	≤0.1A	≤0.14A	≤0.24A
	Rated Input Current	0.05A	0.09A	0.13A	0.21A
	Power Factor	0.9			
	THD	<20% @230V			
	Efficiency	80%	85%	85%	84%
	No load wattage	≤1W		≤1.25W	≤2.1W
Protection	Short circuit protection	Pass			
	Over voltage protection	Pass			
	Over temperature protection	Pass			
Safety &EMC	Withstand voltage	I/P-O/P:3.75KVac,<5mA 60S;I/P-FG:1.6KVac,<5mA 60S;O/P-FG:0.5KVac,<5mA 60S			
	Isolation Resistance	I/P-O/P: 500VDC, ≥100M Ω			
	Surge	L-N:0.5KV		L-N:1KV	
	EMC Emission	EN55015, EN61000-3-2			
	EMC Immunity	EN61000-4-2,3,4,5,6,8,11; EN61547			

Installation Procedure

WARNING

1.Switch off before installation / maintenance.
2.Switch on only after complete installation and examination of the circuit.
3.Professional electrician for installation and maintenance only.





Turn Off power supply before starting any installation. Read instructions & check you have all the tools & accessories to complete the installation correctly.

Recessed Installation

Step 1

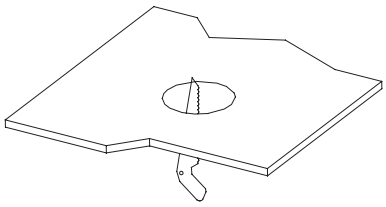

Open a hole according to the cutout size of led downlight.

Step 2

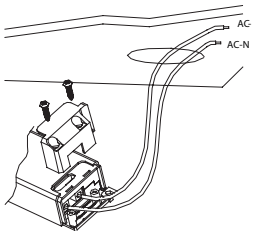

Use screw-driver to open the driver terminal cover,feed the main AC wire L.N.in terminal block respectively,then fix the cover back.

Step 3

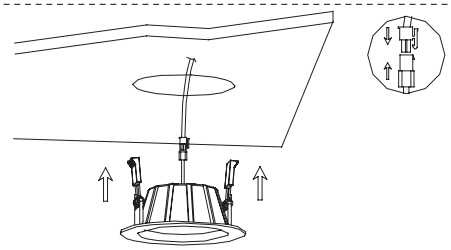

Connect the downlight with driver,hold back the spring clip then push the downlight into the hole

Step 4

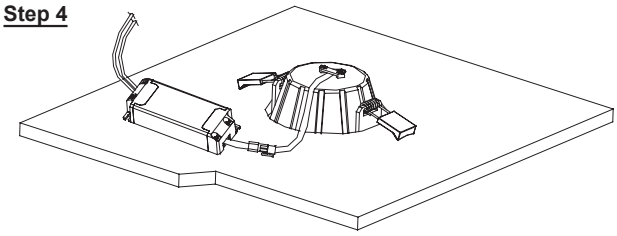

Make sure the downlight fixed tightly in ceiling turn on the power

26 Nguni Drive, Longmeadow Business Estate, Edenvale, Gauteng, South Africa
Sales: 010 202 3400 | Technical: 010 202 3500 | Johannesburg: 010 202 3300
Germiston: 011 418 9600 | Cape Town: 021 510 0710 | Pinetown: 031 700 4215 | Riverhorse: 031 492 4800

ACDC DYNAMICS
www.acdc.co.za