# UP1/M UP2/M UNEQUAL REPEATING & TWO-SHOT TIMER






## OVERVIEW

The UP1/M & UP2/M are quality timers manufactured by ACDC Dynamics, an ISO 9001:2000 registered company. This timer is microprocessor controlled giving you high repeat accuracy. The specific advantage of the UP1/M & UP2/M is that it replaces 2 standard timers making it an excellent choice as a timer to carry in stock. These timers are supplied for use with a standard 11 PIN base and is part of a wide range of electronic timers and relays.
UP1 - Unequal repeating, TSP1 - Two Shot

## INSTALLATION

This module should be installed by a competent electrician in accordance with the relevant diagram. Read these instructions carefully to ensure that the correct functions / settings / control voltage are correct prior to switch on.

## FUNCTION

The function is selectable on DIP switch 6.

| Function | DIP Switch 5 | DIP Switch 6 |
|---|---|---|
| Unequal Repeating Timer (Off First) | Off | Off |
| Unequal Repeating Timer (On First) | On | Off |
| Two-shot Timer (Off First) | Off | On |
| Two-shot Timer (On First) | On | On |

| Specifications | |
|---|---|
| Range Accuracy | 0.1% |
| Repeatability | 0.1% |
| Scale Accuracy | ±5% |
| Reset Time | 300ms |
| Operating Temperature | -20˚C to 70˚C |
| Power Consumption | AC: 1.5VA, DC:100mA |
| Contact Rating | 5A 250VAC |

**Available Voltages:**

**AC:** Galvanic isolation with internal transformer 12, 24, 48, 110, 230, 400 or 525VAC ± 15% (Test Volts 2kV)

**DC:** 12, 24, 48VDC, 24-250VAC/DC

## Connection Diagram

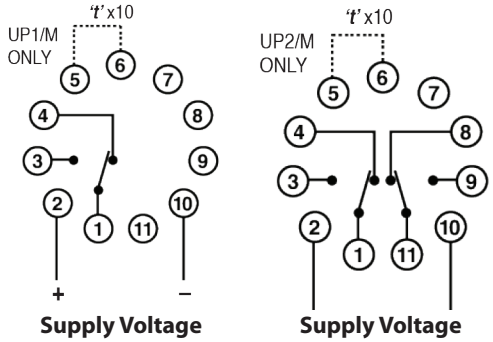


## TIME RANGES

The time ranges can be changed using DIP switches.
The time is adjustable using the pots on the front of the timer.

| ON Time Range | | DIP Switch 1 | DIP Switch 2 |
|---|---|---|---|
| No Link | Link 5-6 | | |
| 0.15s to 10s | 1.5s to 100s | off | off |
| 1s to 1m | 10s to 10m | on | off |
| 10s to 10m | 100s to 100m | off | on |
| 1m to 1h | 10m to 10hr | on | on |

| OFF Time Range | | DIP Switch 3 | DIP Switch 4 |
|---|---|---|---|
| No Link | Link 5-6 | | |
| 0.15s to 10s | 1.5s to 100s | off | off |
| 1s to 1m | 10s to 10m | on | off |
| 10s to 10m | 100s to 100m | off | on |
| 1m to 1h | 10m to 10hr | on | on |

## UNEQUAL REPEATING TIMER (OFF FIRST)

*DIP switched 5 and 6 OFF*

When the power is applied, the relay is de-energised and the off timer starts. When the off time expires, the relay energises and the LED lights up. Then the on timer starts. When the on timer expires, the relay de-energises and the LED goes off. This repeats until the supply is disconnected.

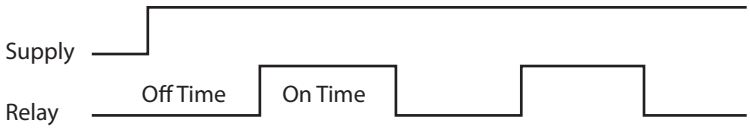


## UNEQUAL REPEATING TIMER (ON FIRST)

*DIP switched 5 On : 6 OFF*

Same as above, but start with the on time period first.

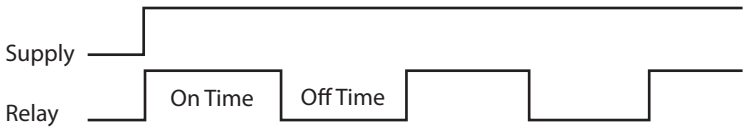


## TWO-SHOT TIMER (OFF FIRST)

*DIP switched 5 OFF : 6 ON*

When the power is applied, the relay is de-energised and the off timer starts. When the off time expires the relay energises and the LED lights up. Then the on timer starts. When the on timer expires, the LED goes off and the relay de-energises and stays de-energised until the supply is disconnected.

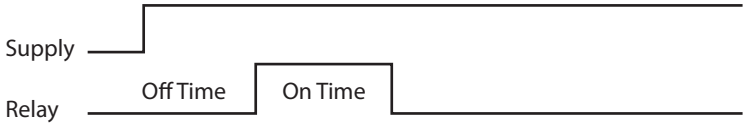


## TWO-SHOT TIMER (ON FIRST)

*DIP switched 5 ON : 6 ON*

Same as above, but start with the on time period first.

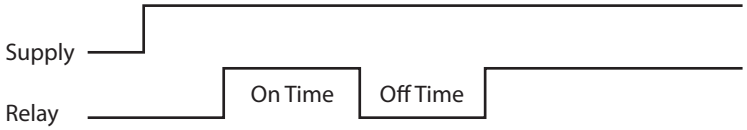


## BRANCH CONTACT DETAILS

Johannesburg: 010 202 3300
Cape Town: 021 510 0710
Pinetown: 031 700 4215
Germiston: 011 418 9600
Riverhorse: 031 492 4800