Product SPECIFICATION SHEET

ACDC DYNAMICS
www.acdc.co.za

# QUICKROLL CABLE DECOILER MAX. WIDTH 515MM 200KG

## VE12801

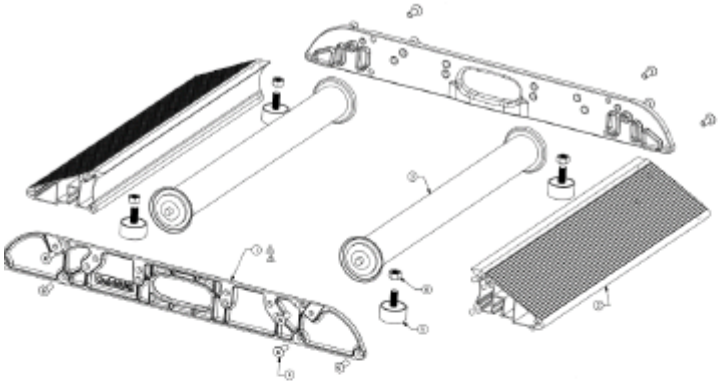

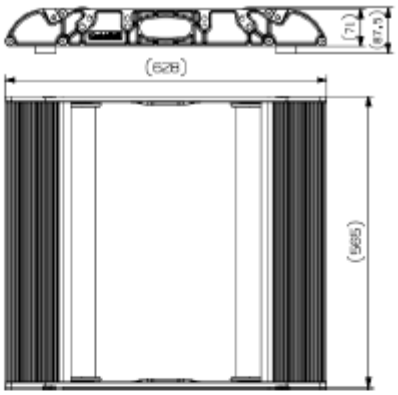


**Technical data:**

| | |
|---|---|
| Max width cable drum | 515 mm |
| Max/min ø cable drum | 200 – 700 mm |
| Max load | 200 kg |
| Weight | 8,15 kg |

**Measurements:**

| | |
|---|---|
| Width | 565 mm |
| Lenght | 628 mm |
| Height | 87,5 mm |

**Attachements:**

| | |
|---|---|
| Set of wheels (4 pcs) | VE12805 |
| Accesory adapter set | VE12806 |
| Guiding roller | VE12807 |
| Cable lenght meter | VE12809 |

QuickRoll cable decoiler in lightweight metal. Suitable for safe and quick unrolling of cable from drums or bobbins. The durable frame is entirely made of aluminum, with rollers in galvanized steel. The position of the rollers can easily be adjusted with the help of a screwdriver, so the QuickRoll fits into drums / bobbins with an outer diameter of 200-700 mm.

The ramps are provided with anti-slip protection and they are designed to have a low angle thus making it easier to roll on the drum. The safety edge of the ramp prevents the drums from being rolled on slanted, and prevents accidents.

The sides are prepared with a slot for attachments, and the rubber feet can easily be swapped to wheels.

**BRANCH CONTACT DETAILS**

| | |
|---|---|
| Johannesburg | 010 202 3300 |
| Germiston | 011 418 9600 |
| Cape Town | 021 510 0710 |
| Pinetown | 031 700 4215 |
| Riverhorse | 031 492 4800 |

**NATIONAL CALL CENTRE**
Sales 010 202 3400
Technical 010 202 3500
www.acdc.co.za